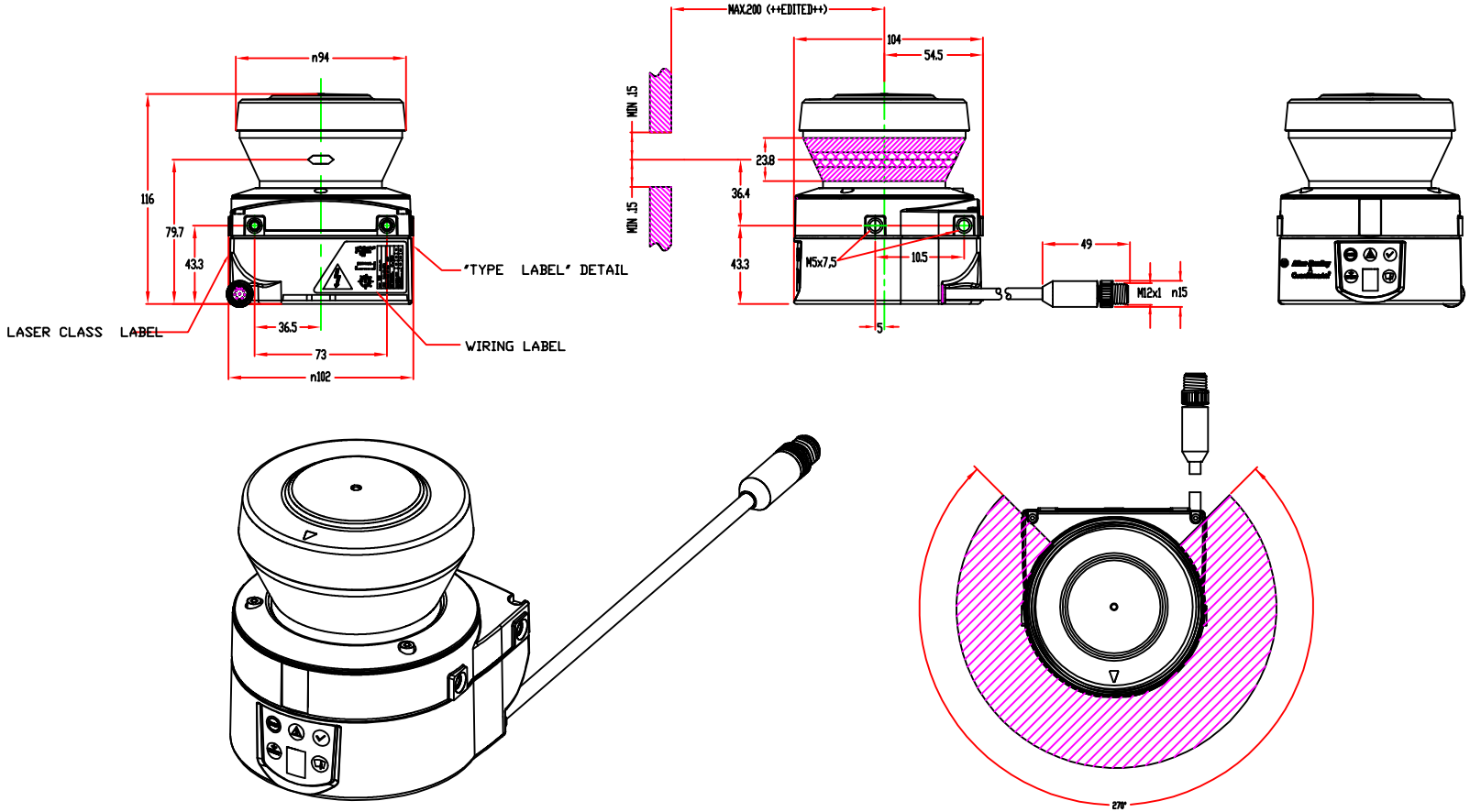
n94
116
79.7
43.3
36.5
73
n102
'TYPE LABEL' DETAIL
LASER CLASS LABEL
WIRING LABEL
MAX.200 (++EDITED++)
MIN .15
MIN .15
104
54.5
23.8
36.4
43.3
M5x7.5
10.5
5
49
M12x1 n15
270°