Approximate Dimensions

Approximate Dimensions are shown in millimeters (inches). Approximate Dimensions are not intended to be used for manufacturing purposes.

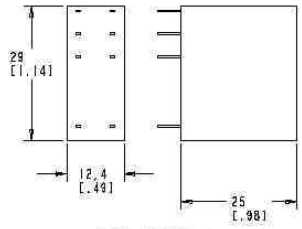

Bulletin 700-HP Relay

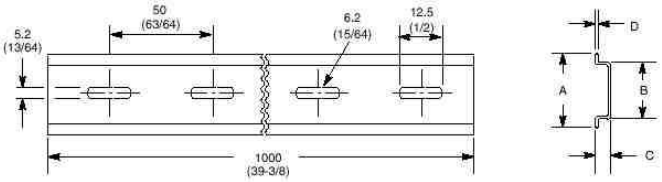

Cat. No. 199-DR1 DIN Mounting Rail Series B
Cat. No. 199-DR4 DIN Mounting Rail Series B Has No Mounting Holes

Cat. No.	A	B	C	D	Approx. Shipping Wt.
199-DR1	35 (1-3/8)	27 (1-1/16)	7.5 (19/64)	1.02 (1/64)	1.85 kg (4.07 lbs.) (10/pkg)
199-DR4	35 (1-3/8)	27 (1-1/16)	15 (19/32)	2.3 (3/32)	3.68 kg (8 lbs.) (5/pkg)

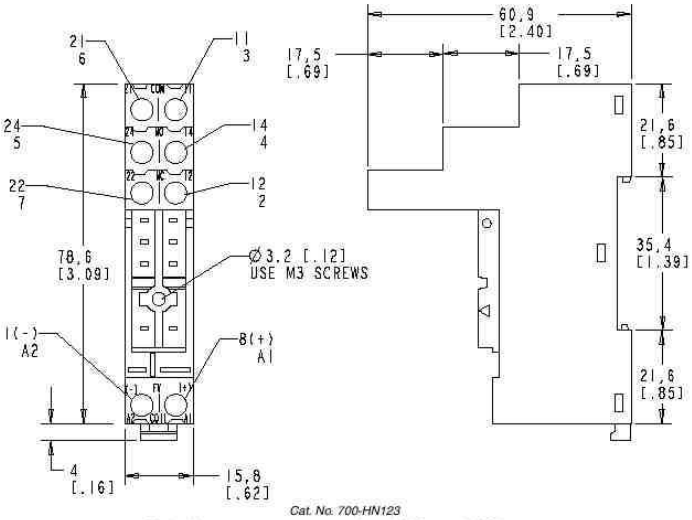

Cat. No. 700-HN123

Single Wire: 0.2 mm2.....2.5 mm2 (#24 AWG.....14 AWG)
Double Wire: 2 X 0.2 mm2.....2 X 2.5 mm2 (2 X 24 AWG....#.2 X 14 AWG)
Wire Type: solid or stranded, copper only
Strip Length: 7 mm (9/32 in.), Torque: 0.5Nm (4.4 lb-in.)